ISLANDED MODE MICROGRID AUTOMATION BY USING DROOP CONTROL METHOD FOR STRANDED ZONE IN BANGLADESH

Abu Hena MD Shatil[1] and Md Lutfur Rahman[2]

***Abstract*—**Distributed generation (DG) is a critical component of the emerging microgrid concept, which enables sustainable energy integration within a distribution network. Inverters are critical components of DG unit operation since they connect energy sources to the grid utility. By combining inverters with feasible control mechanisms, the interface may be enhanced successfully. These controllers are critical in microgrids since they help to increase the system's performance, stability, resilience, and dependability. In Bangladesh, areas like Saint Martin, Hatia are remotely located where this type of microgrid automation can be implemented. The microgrid can be operated in grid-connected and island mode. Different control strategies like droop control, master-slave control, circular chain control, average current sharing control can be used to perform grid in island mode. In this study, a hierarchical droop control methodology has been used. In a conventional droop control system load-dependent on the frequency and voltage regulation become poor. In this research, it has been observed that the hierarchical droop control network shows stable power-sharing with improved voltage and frequency regulation. Extensive simulations have been carried out to validate the proposed control strategy's effectiveness in terms of rapid transient response and stabilization of voltage, frequency, and power equitability among the micro sources in the islanded microgrid.

***Keywords*—**Droop Control, Microgrid, Automation, Islanded Mode.

I. INTRODUCTION

FOSSIL fuel-based power system has less significance right now due to environmental and economical aspects. The renewable energy-based power system is the future right now. It has many advantages like less carbon emission, higher reliability, access to the remote location, LVRT (low voltage ride through), and so on. But still, this type of Distributed Energy Generation (DEG) has some drawbacks. Many DEGs will be connected with the main grid which will decrease the reliability and efficiency of the grid. Eventually, the grid will become more complex and vulnerable. Also, there is a challenge to separate the DEG from the grid at the time of fault which will again increase the complexity of the network. That's where the concept of microgrid was initiated. The microgrid is an integrated system where various renewable and nonrenewable energy generation, storage devices, load control centers, and energy management systems will be incorporated. It can be operated in grid-connected mode or isolated mode. Another key point for the microgrid is that it focuses on the end-user or consumer which will reduce the cost of the transmission line. An isolated zone like saint martin, Bhola, Hatia where power distribution is a challenge, can be the customer of this microgrid system [1].

A. H. M. Shatil is with the Department of Electrical and Electronic Engineering (EEE), American International University- Bangladesh (AIUB), Kuril, Dhaka, Bangladesh. (email: *abu.shatil@aiub.edu*).

M. L. Rahman completed his Master of Science in Electrical and Electronic Engineering from American International University-Bangladesh (AIUB), Dhaka. Currently, he is with the Electrical Technology Division at Montage Polytechnic Institute, Dhaka, Bangladesh as the Head and also as a Trainer. (email: *md.lutfurrahmanabrar@gmail.com*).

II. LITERATURE REVIEW

Load variation on the consumer side is a common scenario for every distribution company. In microgrid due to load variation voltage and frequency will be changed which will fluctuate the active and reactive power even more. The nonlinear and unbalanced load will introduce harmonics to the system which can be eliminated by using a filter but that is not a cost-effective system. So to control the grid firmly different types of control strategies can be implemented which will be cost-effective. These control strategies are divided into three layers which are primary, secondary, and tertiary level. In primary levels, it deals with voltage and current behavior in the system. The secondary level controls the fluctuation of voltage, current, and frequency in the system and regulates the power quality. Tertiary level concentrate on energy management for the overall network [2].

In a microgrid, the mode in which control actions are implemented to provide coordinated control is centralized, decentralized, distributed, or hierarchical. Centralized control utilizes a single central controller to collect data about DG units and provide control signals to the DG units. There is no central controller in decentralized and distributed control. Decentralized control, on the other hand, operates only on local information, whereas distributed control operates on local information in conjunction with surrounding communication. Because a hierarchical control structure incorporates both local and upper-level controllers, voltage stability may vary, and environmental emissions, energy-saving, and operating costs all contribute to the lowering of power system resilience. A decentralized multi-agent control system can be used to increase resilience [2].

Droop control is one of the key techniques to achieve better performance in the microgrid. In isolated mode, all the inverters are connected in parallel. They will have the same voltage with different current values. Current sharing in this type of network will induce instability because it depends on the rating of the inverters and sources. This type of load-sharing instability can be ruled out by using the droop control technique. Different type of droop control strategy like conventional droop control, modified droop control, combined droop control, hierarchical droop control is available. For this paper, the hierarchical droop control method has been used [3].

III. Droop Control System

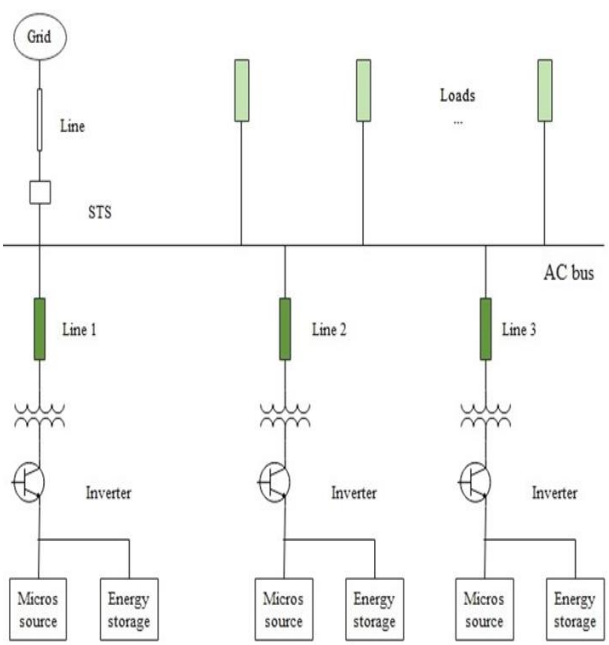

Fig. 1. Microgrid system overview

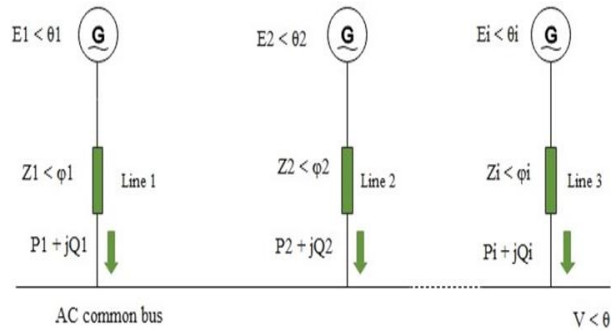

Fig. 2. Equivalent circuit of a high voltage microgrid connected to a common bus

The net real and reactive power injections are calculated using a typical AC power flow model, $P_{inj}^{j}(t)$ and $Q_{inj}^{j}(t)$, At time t, the j-th bus is provided by

$$P_{inj}^{j}(t) = \sum_{k\in\mathcal{N}_j} V_j(t)V_k(t)\left|Y_{jk}\right| \sin\left(\delta_{jk}(t) + \frac{\pi}{2} - \angle Y_{jk}\right)$$

$$Q_{inj}^{j}(t) = \sum_{k\in\mathcal{N}_j} V_j(t)V_k(t)\left|Y_{jk}\right| \sin\left(\delta_{jk}(t) - \angle Y_{jk}\right) \quad (01)$$

where $V_j(t)$ and $\delta_j(t)$ are the j-th bus's voltage magnitude and phase angle, respectively and $\delta_{jk}(t) = \delta_j(t) - \delta_k(t)$.

For every $i \in \mathcal{V}$, The error dynamics of the microgrid connected to bus i (with frequency and voltage droop control) are given by

$$\Delta\dot{\delta}_i(t) = \Delta\omega_i(t) \quad (2)$$

$$J_{\omega_i}\Delta\dot{\omega}_i(t) = -D_{\omega_i}\Delta\omega_i(t) + \Delta P_{ext}^{i}(t) - \Delta P_{inj}^{i}(t) \quad (3)$$

$$J_{V_i}\Delta\dot{V}_i(t) = -D_{V_i}\Delta V_i(t) + \Delta Q_{ext}^{i}(t) - \Delta Q_{inj}^{i}(t) \quad (4)$$

where $\Delta\delta_i(t) = \delta_i(t) - \delta_i^{ref}, \Delta\omega_i(t) = \omega_i(t) - \omega_i^{ref}$, $\Delta V_i(t) = V_i(t) - V_i^{ref}$, $\Delta P_{inj}^{i}(t) = P_{inj}^{i}(t) - P_{inj}^{i,ref}$ and $\Delta Q_{inj}^{i}(t) = Q_{inj}^{i} - Q_{inj}^{i,ref}$ are the deviations of the angle,

At time t , the error dynamics of the microgrid connected to each $i \in \mathcal{V}$ are defined by

$$J_{\delta_i}\Delta\dot{\delta}_i(t) = -D_{\delta_i}\Delta\delta_i(t) + \Delta P_{\text{ext}}^{i}(t) - \Delta P_{inj}^{i}(t) \quad (5)$$

$$J_{V_i}\Delta\dot{V}_i(t) = -D_{V_i}\Delta V_i(t) + \Delta Q_{ext}^{i}(t) - \Delta Q_{inj}^{i}(t) \quad (6)$$

where J_{δ_i} and D_{δ_i} are the i-th microgrid's equivalent inertia and damping coefficients with angle droop control.

$$\Delta\dot{\omega}_i(t) = -\frac{D_{\delta_i}}{J_{\delta_i}}\left[-\frac{D_{\delta_i}}{J_{\delta_i}}\Delta\delta_i(t) + \frac{1}{J_{\delta_i}}\Delta P_{ext}^{i}(t) - \frac{1}{J_{\delta_i}}\Delta P_{inj}^{i}(t)\right] - \frac{1}{J_{\delta_i}}\Delta\dot{P}_{inj}^{i}(t) \quad (7)$$

The network of interconnected microgrids' augmented state, input, and disturbance vectors are defined as follows: $x(t) = [x_1'(t), x_2'(t), \dots, x_N'(t)]'$,

$u(t) = [u_1'(t), u_2'(t), \dots, u_N'(t)]'$ and $w(t) = [w_1'(t), w_2'(t), \dots, w_N'(t)]'$ respectively. we define an output vector $y_i(t)$ for every $i \in \mathcal{V}$ as $y_i(t) = g^i_{\sigma_i(t)}(x_i(t), w_i(t))$, where $g^i_{\sigma_i(t)}(t) = [\Delta\dot{\delta}_i(t)\ \Delta V_i(t)]'$ when $\sigma_i(t) = 1$ and $g^i_{\sigma_i(t)}(t) = [\Delta\dot{\omega}_i(t)\ \Delta V_i(t)]'$ when $\sigma_i(t) = 2$. The augmented output vector is $y(t) = [y_1'(t), y_2(t), \dots, y_N'(t)]'$

Note that the outputs of each microgrid at any given time are the quantities for which measurements are available at that time [4],[5],[6],[7].

$$\dot{x}(t) = A_{\sigma(t)}x(t) + B^{(1)}_{\sigma(t)}u(t) + B^{(2)}_{\sigma(t)}w(t)$$
$$y(t) = C_{\sigma(t)}x(t) + D_{\sigma(t)}w(t) \quad (8a)$$
$$u(t) = Hx(t),$$
$$A_j = \left.\frac{\partial f_j}{\partial x}\right|_{\substack{x=0\\w=0}},\ B^{(1)}_j = \left.\frac{\partial f_j}{\partial u}\right|_{\substack{x=0\\w=0}},\ B^{(2)}_j = \left.\frac{\partial f_j}{\partial w}\right|_{\substack{x=0\\w=0}}$$
$$C_j = \left.\frac{\partial g_j}{\partial x}\right|_{\substack{x=0\\w=0}},\ D_j = \left.\frac{\partial g_j}{\partial w}\right|_{\substack{x=0\\w=0}} \quad (8b)$$
$$H = \begin{bmatrix} \frac{\partial u_1}{\partial x_1} & \cdots & \frac{\partial u_1}{\partial x_N} \\ \vdots & \vdots & \vdots \\ \frac{\partial u_N}{\partial x_1} & \cdots & \frac{\partial u_N}{\partial x_N} \end{bmatrix}_{x=0,w=0} \quad \text{where} \quad (8c)$$
$$\frac{\partial u_i}{\partial x_k} = \begin{bmatrix} \frac{\partial \Delta P^i_{inj}}{\partial \Delta\delta_k} & \frac{\partial \Delta P^i_{inj}}{\partial \Delta\omega_k} & \frac{\partial \Delta P^i_{inj}}{\partial \Delta V_k} \\ \frac{\partial \Delta Q^i_{inj}}{\partial \Delta\delta_k} & \frac{\partial \Delta Q^i_{inj}}{\partial \Delta\omega_k} & \frac{\partial \Delta Q^i_{inj}}{\partial \Delta V_k} \end{bmatrix}, i, k \in \{1, .., N\}$$
$$\int_{t_0}^{t} \begin{bmatrix} y(\tau) \\ w(\tau) \end{bmatrix}' \begin{bmatrix} Q_j & S_j \\ S_j' & R_j \end{bmatrix} \begin{bmatrix} y(\tau) \\ w(\tau) \end{bmatrix} d\tau \geq V(x(t)) - V(x(t_0))$$

if, for all $t \in \mathbb{R}_+$ and $j \in \Sigma^N$,

$$\begin{bmatrix} y(t) \\ w(t) \end{bmatrix}' \begin{bmatrix} Q_j & S_j \\ S_j' & R_j \end{bmatrix} \begin{bmatrix} y(t) \\ w(t) \end{bmatrix} \geq \dot{V}(x(t)) + \phi_j(w(t)) + \psi_j(x(t))$$

where $\phi_j(\cdot), \psi_j(\cdot)$ are functions that have a positive definite value $w(t)$ and $x(t)$ respectively.

Assume the following scenario:

$$\begin{cases} Q_{\text{desired}} = \frac{S_i}{\sum_{i=1}^{n} S_i} Q_{\text{load}} \\ Q_i = Q_{\text{desired}} + \Delta Q_i \end{cases} \quad (9)$$
$$K_e(E^* - V_T) = m_i Q_{\text{desired}} \quad (10)$$

Thus, according to (09) and (10), we can obtain

$$K_e[E^* - V_T + (V_T - V_{Ti})] = m_i(Q_{\text{desired}} + \Delta Q_i) \quad (11)$$

So (11) can be rewritten as

$$K_c(V_T - V_{Ti}) = m_i \Delta Q_i \quad (12)$$

The conservation of energy theorem states that It should be emphasized that the system must meet certain requirements.

$$\begin{cases} Q_{\text{desired}} \sum_{i=1}^{n} S_i = Q_{\text{load}} S_i \\ \sum_{i=1}^{n} \Delta Q_i = 0 \\ \sum_{i=1}^{n} Q_i = Q_{\text{load}} \end{cases} \quad (13)$$

IV. Simulation Model

Figure 3 represents the overall simulation model of the microgrid network. V_{dc} is considered as a dc voltage source from DEG. From S1 to S6 represents IGBT switching for the inverter. After that, a filter and a distribution line model has connected with the load. Figure 4 depicts the full control block diagram associated with alpha-beta control, voltage and current control loop, and space vector modulation control. Figures 5-10 has been showing detailed information about these control blocks. This simulation model has been created in a MATLAB environment.

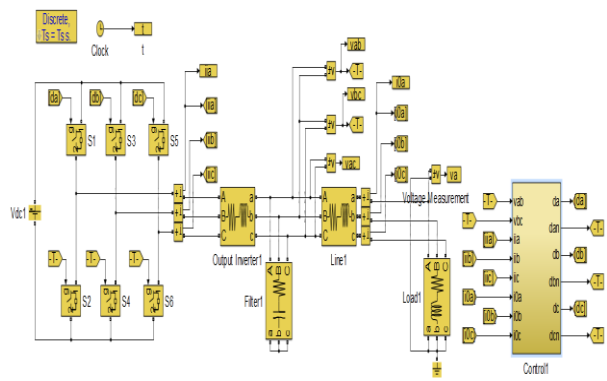

Fig. 3. Microgrid network composed with an inverter, load, and control system

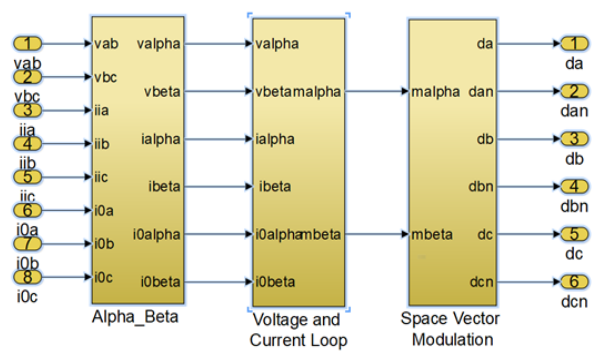

Fig. 4. Detail control network

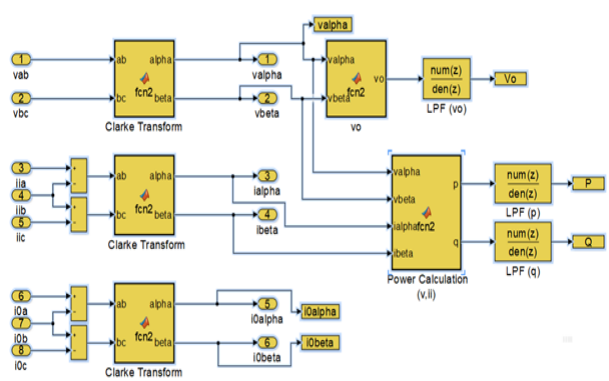

Fig. 5. Alpha-beta subsystem design

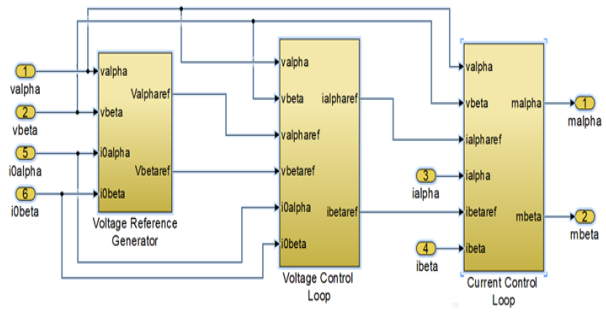

Fig. 6. voltage and current control loop in detail

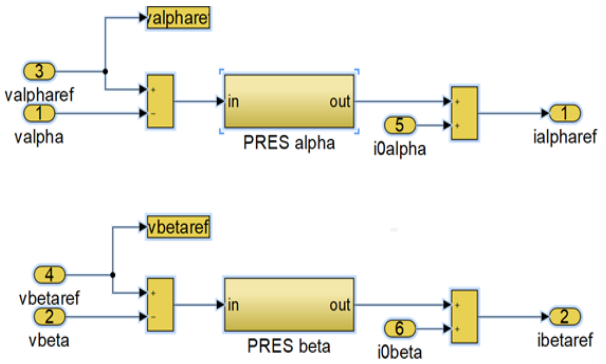

Fig. 7. The voltage control loop in particular

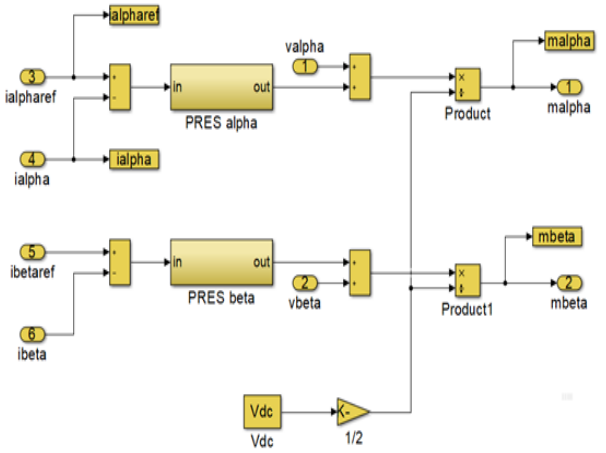

Fig. 8. The current control loop in particular

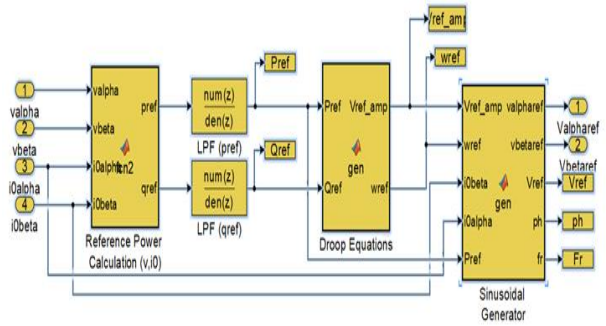

Fig. 9. Voltage reference generator block

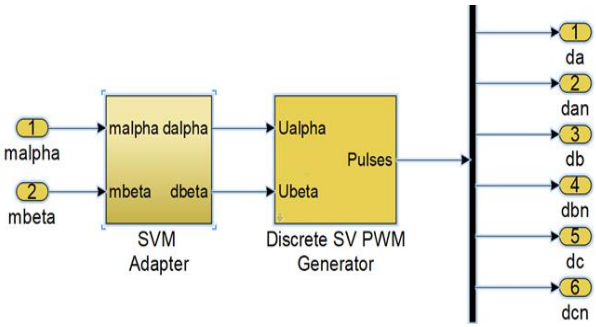

Fig. 10. Space vector modulation

V. Result Analysis

Figure 11 represents the alpha-beta signal which arrives from the alpha-beta block. Here alpha signal leads the beta signal by 90 degrees which shows a precise response from the modulating signal block. Figure 12 verifies the produced alpha element's current monitoring over the benchmark value provided by the current control loop. Voltage monitoring from the voltage control loop, as seen in Fig. 13 illustrates accurate functioning based on the output voltage and line current elements recorded. Due to the predominantly resistive nature of the load, the reactive power component in Fig. 14 is virtually negative, but the active power portion relates to the assessed value in the power calculation block.

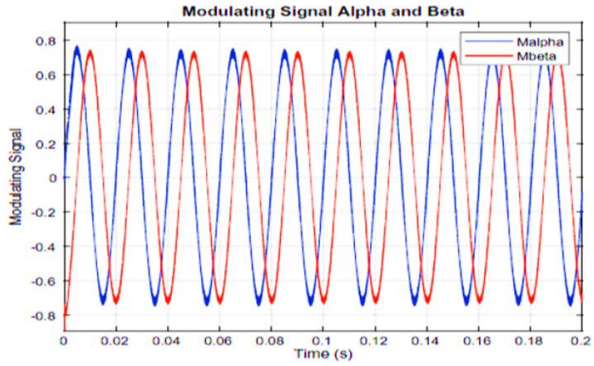

Fig. 11. The output of modulating signal

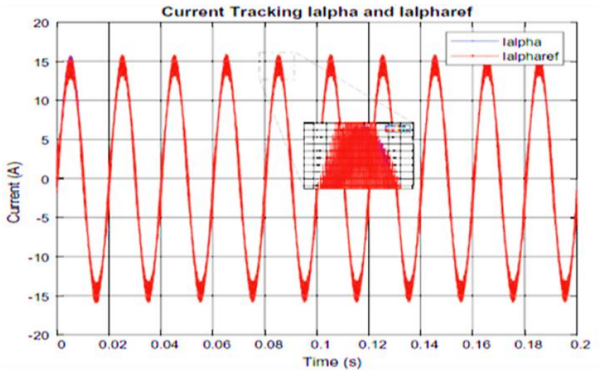

Fig. 12. Current control loop output

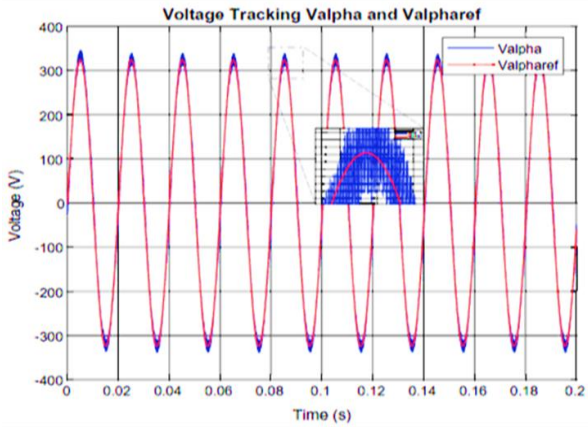

Fig. 13. Voltage control loop output

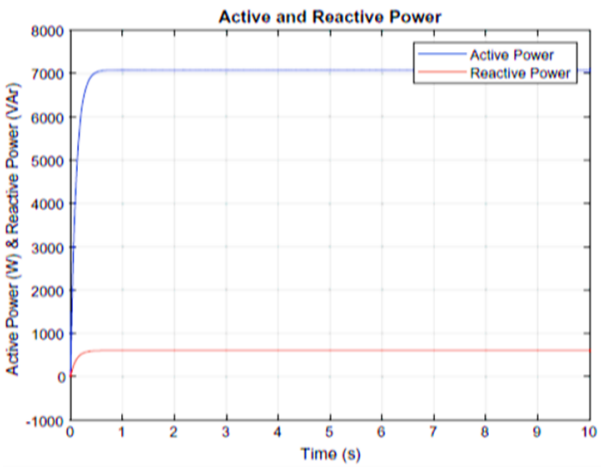

Fig. 14. Active reactive power flow in the system

The outcome produced by Fig 15 demonstrates that the system is operating steadily and that the voltage has reached its nominal value. When just the primary control loop is used, as seen in Figure 15, the output frequency response exhibits a steady-state inaccuracy, requiring the use of a secondary control loop for restoration.

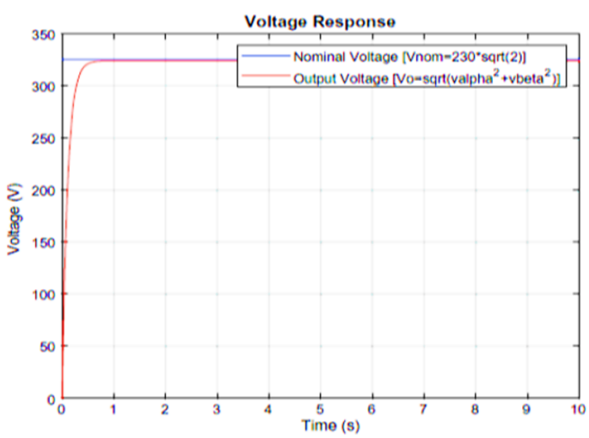

(a)

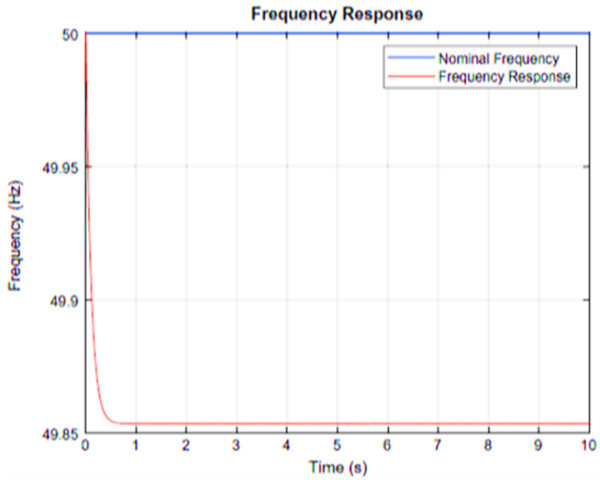

(b)

Fig. 15. (a) Voltage and (b) frequency responses of the grid

VI. Conclusion

This article proposes a unique strategy based on droop control for precisely distributing power across parallel Microgrid. The effect of various feeder impedances was examined in this article, and the simulation findings suggest that changing this parameter (Zline) does not influence the power-sharing accuracy. The suggested method also achieves frequency stability and optimum active power-sharing. Current and voltage tracking signal waves are perfectly organized with modulating signals with a proper calculation from Clark transformation. As the dominant component of grid impedance, transformer impedance has a substantial mitigating effect on the accuracy of reactive power-sharing. Because the suggested robust droop control technique detects local signals on the high voltage side of the transformer as feedback signals, the proposed method is simple and effective to implement in such a medium-voltage microgrid system.

References

[1] Baten, M.Z., Amin, E.Z., Sharin, A., Islam, R., Chowdhury, S.A. "Renewable energy scenario of Bangladesh: physical perspective," 2009 IEEE 1st International Conference on the Developments in Renewable Energy Technology (ICDRET), pp. 1–5. IEEE, UIU, Dhaka, Bangladesh, 2009.

[2] Li, H.J., Wang, J., Sun, Z., et al. "A droop controller that improves the accuracy of reactive power-sharing," Electric Drive vol. 49, issue 6, pp. 69–72, 2019.

[3] Liang, H.F., Zheng, C., Gao, Y.J., et al. "Research on improved droop control strategy of microgrid," Proc. CSEE 17, pp. 24–33, 332, 2017.

[4] B.T. Irving, M.M. Jovanovic, "Analysis, design, and performance evaluation of droop current-sharing method," in APEC 2000. Fifteenth Annual IEEE Applied Power Electronics Conference and Exposition (Cat. No. 00CH37058), vol. 1, IEEE, 2000, pp. 235–241.

[5] A. Molderink, V. Bakker, M.G. Bosman, J.L. Hurink, G.J. Smit, "Management and control of domestic smart grid technology," IEEE Trans. Smart Grid, vol. 1, issue 2, pp. 109–119, 2010.

[6] S.K. Sahoo, A.K. Sinha, N.K. Kishore, "Control techniques in AC, DC, and hybrid AC–DC microgrid: a review," IEEE Journal of Emerging Selected Topics on Power Electronics, vol. 6, issue 2, pp. 738–759, 2017.

Abu Hena MD Shatil is an Assistant Professor of Electrical and Electronic Engineering (EEE) at American International University Bangladesh (AIUB). His work focuses specifically on Energy modeling and its impact on society. He obtained a postgraduate degree in Electrical Energy System from Cardiff University, UK.

Md Lutfur Rahman completed Masters of Science and Bachelor of Science in Electrical and Electronic Engineering from American International University Bangladesh (AIUB). He has been serving as the Head of the Electrical Technology and Trainer at Montage Polytechnic Institute and also Examiner and Script Examiner at Bangladesh Technical Education Board, Dhaka, Bangladesh. His research interest includes Power, Electronics, the Internet of Things (IoT), Biomedical, Telecommunications and power system analysis, etc.